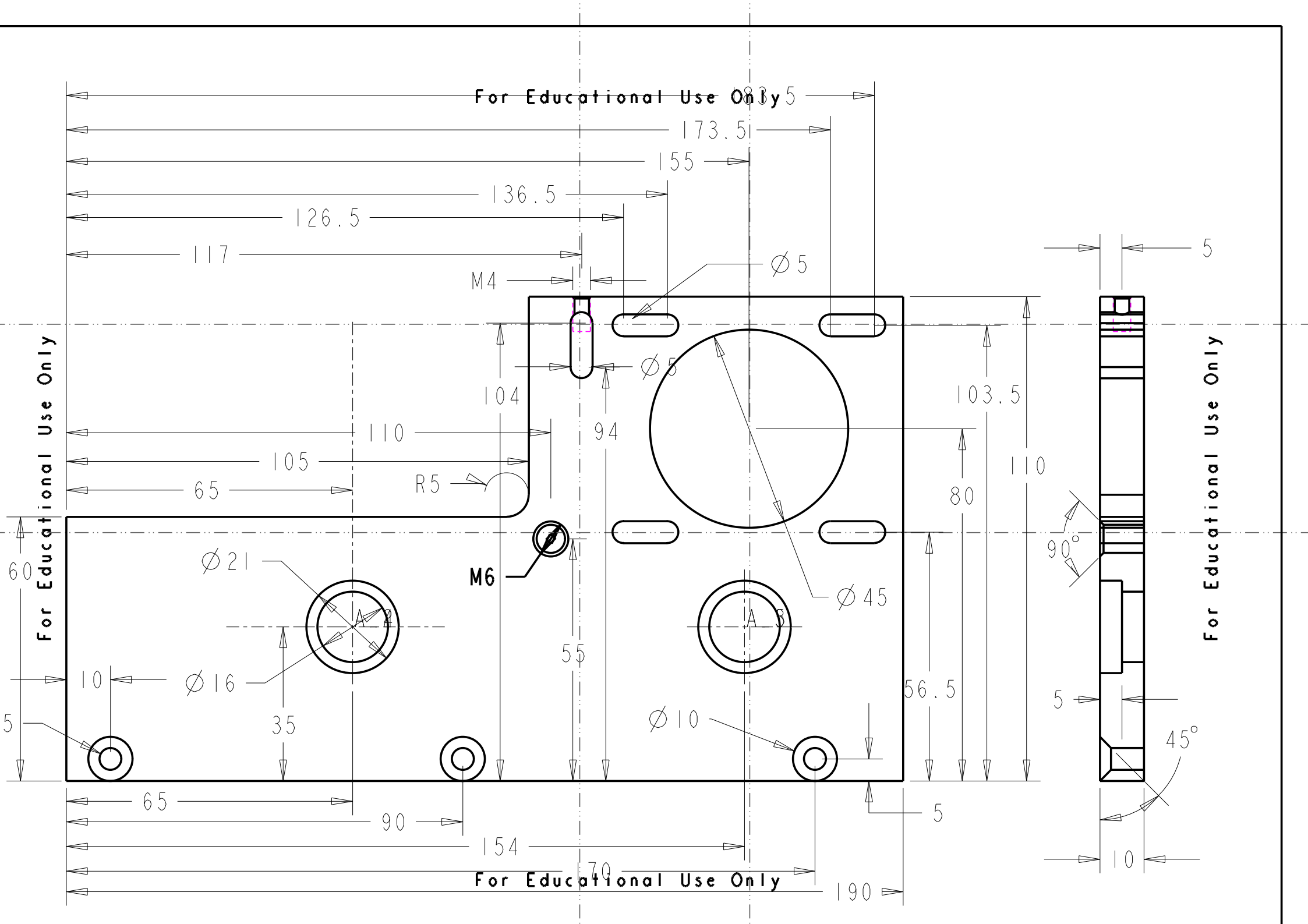
For Educational Use Only
183.5
173.5
155
136.5
126.5
117
M4
Ø5
Ø5
104
94
103.5
110
105
65
R5
80
110
60
Ø21
M6
Ø45
A 2
A 3
55
Ø16
10
35
56.5
5
Ø10
5
90°
45°
65
90
154
170
190
5
10
For Educational Use Only
For Educational Use Only
For Educational Use Only